Changzhou Winpark Electronics Co., Ltd
Add: 5th Floor of Tianan Industrial Village A plus, Xinbei, Changzhou 213022, China
Tel: 0086-519-85132277 Email: allen@cnwinpark.com
Fax: 0086-519-85108252 Web: www.cnwinpark.com

CRS200 8-loop Current Detecter Operation Manual

Version：V1.2

Thank you for using Winpark products. Please read this manual carefully before operating the controller and always keep it around you to make it available easily anytime.

WARNING

Wire connection

If failure or error of this instrument could result in a critical accident of the system, install an external protection circuit to prevent such an accident.
Choose fuse protection power supply wire and output wire to avoid strong current strike which may cause failure or damage to the controller.

Power supply

Please use the controller under rated power supply to avoid causing failure or damage to the controller.
Don't turn on thee power supply until all of the wiring is completed and checked again

Using sites limitation

Don't use this controller in the places subject to flammable or explosive gas to avoid cause fire.
Don't use this controller in dusty, corrosive and steam exhaust environment
Don't use this controller where there are strong shock and strike.

□ General Electrical Data

Rated voltage	24V DC
Power consumption	≤5VA
Insulation Strength	Power supply- input：1500V AC 1min Input-relay output：1500V AC 1min Power supply-relay output：1500V AC 1min
Insulation Resistance	Input-power supply：>20MΩ
Working Environment	Ambient temperature：0°C ~50°C Relative humidity：35%~85%（no condensation）

□ Measuring Data

Measuring range	0~50A
Display Accuracy	0.1A
Tolerance	±1%FS

□ Wiring connection

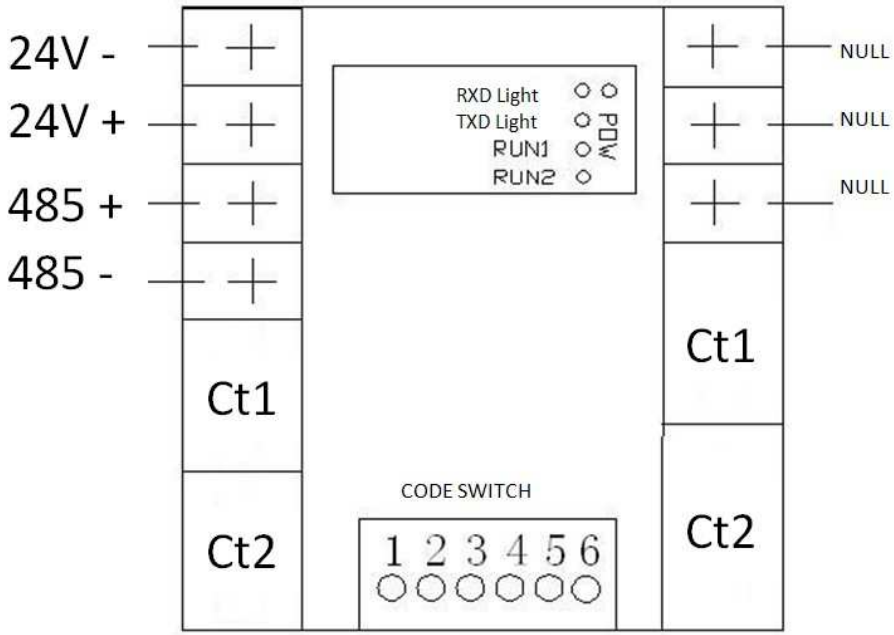

Code Switch Explanation:

The address select switch uses 8421 coding. 4 corresponds to 1; 5 corresponds to 2; 6 corresponds to4; When it is switched to ON, it means valid. The communication address is the sum of the valid numbers added a extra 30. For example: （4：ON, 5：OFF, 6：ON）,（1+0+4）+30=35; Which means the module address is 35. If there are several modules connected in the same BUS, the address of modules should be different from each other.

Baud Rate: baud rate is selected by switch No.2 (No. 1 and 3 are not used)

Switch Status	OFF	ON
Baud Rate (BPS)	9600	19200

□ Parameter explanation

Name			Definition	Read/Write	Add	Description
T			Measure cycle	Read/Write	W1	See sample explanation
VER			Program version	Read only	W59	Module version
ALM			Alarm status	Read only	W61	See Remark 1
AH	CT 1		Upper limit alarm	Read/Write	W2~W5	See sample explanation
	CT 2		Upper limit alarm	Read/Write	W6~W9	See sample explanation
AL	CT 1		Lower limit alarm	Read/Write	W10~W13	See sample explanation
	CT 2		Lower limit alarm	Read/Write	W14~W17	See sample explanation
PV	CT1	COM1	Current measure value	Read only	W86	Unit0.1A
		COM2	Current measure value	Read only	W87	Unit0.1A
		COM3	Current measure value	Read only	W88	Unit0.1A
		COM4	Current measure value	Read only	W89	Unit0.1A
	CT 2	COM1	Current measure value	Read only	W90	Unit0.1A
		COM2	Current measure value	Read only	W91	Unit0.1A
		COM3	Current measure value	Read only	W92	Unit0.1A
		COM4	Current measure value	Read only	W93	Unit0.1A

Remark 1：Bit explanation of Alarm status(Upper limit alarm use high 8 bit; Lower limit alarm use low 8 bit)

Bit	7	6	5	4	3	2	1	0
	CT 2				CT 1			
Upper limit alarm	COM 4	COM 3	COM 2	COM 1	COM 4	COM 3	COM 2	COM 1
Corresponding coil address	B983	B982	B981	B980	B979	B978	B977	B976
Lower limit alarm	COM 4	COM 3	COM 2	COM 1	COM 4	COM 3	COM 2	COM 1
Corresponding coil address	B991	B990	B989	B988	B987	B986	B985	B984

Sample explanation：

Measure cycle =5*T（could be set）; Measure cycle should be multiples of 20ms.

When measure value PV>AH，upper limit alarm will output, the BIT (B976) of corresponding channel 1 will be changed into 1; When measure value PV<AL，lower limit alarm will output, the BIT (B984) of corresponding channel 1 will be changed into 1.

External wiring instructions

communication cable wiring instructions:

a)Communication cable should be shielded or twisted-pair cable. Loose wires are forbidden

b)Communication cable and power cable should be laid separately.

□ Basic communication protocol： Modicon Modbus Protocol，RTU Slave Mode

(Note: If the touch screen has the function of fragment communication optimization, please close this optimization function)

Communication connection	RS485
Data bit	8
Parity bit	even
Stop bit	1
Baud rate	9600BPS，19200 selectable
Equipment address	30+ the value of address coding switch
Parameter, variable	Exist in form of holding register（HR）, show in 2 bytes 16 hexadecimal complement, address shows as Wxxxx
Bit status	Exist in form of coil, show in 1 bit, value 1 means valid., address shows as Bxxxx
Supported command	01（Read Coil Status） 03（Read Holding Registers） 05（Force Single Coil） 06（Preset Single Register） 16（Preset Multiple Regs）
Because the communication buffer area is relatively small in the module, please close communication optimization function when programming touch screen configuration.	