Winpark GR858/GR858P temperature controller operation manual

Thank you for using Winpark GR858/GR858P digital temperature controller.

This instruction describes product function, features and proper usage.

1.Warning ····· 3

2.Attention ····· 4

3.Electrical Overview ····· 5

(1) Electrical Features ····· 5

(2) Electrical Specification ····· 5

(3) Model Selection ····· 6

(4) Install Hole Size ····· 7

4.Electrical Wiring ····· 8

(1) Relay/SSR/Current Voltage Output ····· 8

(2) Three-Phase Full-Wave Control ····· 9

(3) Phase Shift ····· 12

(4) Three-Phase Half-Wave Control ····· 13

5.Operation Panel Explanation ····· 14
6.Communication Function ····· 15
7.Menu Explanation ····· 16
8.Example of Program Control ····· 39
9.Operation Mode of Program Control ····· 43
10.Error Code Sheet ····· 46

1. Warning

①Please do not touch controller electric transmission AC power supply terminals, lest suffer click.

②Before power on, please confirm the power supply and controller specifications, otherwise electric transmission may cause damage of the controller.

③Never remove, modification and repair the products or contact with any internal components.

④If the output relay is more than the expected service life, the occasional contact melting and burning.

⑤With 0.74-0.90N.m torque tighten the screw terminal, loose screws may cause fire.

⑥In order to prevent the instrument damage or failure, choose the appropriate fuse guarantee to prevent the power and input/output current cord.

⑦As fire, explosion, or instrument damage, stop use in the environment of flammable, explosive gas, venting sites.

2. Attention

①Allow for heat dissipation, do not fill the space around products, don't vent plug Products.

②Please do not install the controller in vulnerable to high frequency interference, corrosive gas, high temperature and high humidity, freezing and condensation, liquid and splashing of oil and gas.

③In the controller and other devices. which can produce high frequency and surge should keep enough distance .

④Please make sure the wiring to correct use of Terminals.

⑤Using the product under rated load and power supply.

⑥Do not use paint thinner or similar chemical cleaning products, please use standard alcohol.

⑦Reading list and the specifications provided by the information, and ensure that they have before continuous control output unit to understand the information.

⑧If before the mask was peeling or broken, you must not use temperature controller.

3. Electrical Overview

（1）Electrical Features

1. Adopt digital coordinate system to improve measurement accuracy and prevent unnecessary error.

2. Simplified Organization and Easy Operation & Wiring

（2）Electrical Specification

Working Voltage	85-265VAC，50/60Hz
Working Environment	0-50℃，35%-85%RH
Accuracy	±0.3%FS

（3）Model Selection

GR858 ()-□ □ □ □ □ □ □ - □□□□

② ③ ④ ⑤ ⑥ ⑦ ⑧

① GR858：General Temperature Controller GR858 (P)：General Temperature Controller with 32 segment program control

② Panel Size

A：48*48 B：48*96 D：72*72 E：96*96

③ Input Signal

T:TC/RTD Input A: Current/Voltage Signal Input

④ Main Output

1: Relay 2: SSR

3: Current/Voltage Signal Output 4: Single-Phase SCR Trigger

5: Three-Phase Zero-Cross Trigger (without midline) 6: Three-Phase Zero-Cross Trigger (with midline)

7: Three-Phase Phase-Shift Trigger (without midline) 8: Three-Phase Phase-Shift Trigger (with midline)

M: Three-Phase Zero-Cross Half-Control (without midline) N: Three-Phase Phase-Shift Half-Control (without midline)

⑤ Alarm Output

1:1 way alarm relay output 2:2 way alarm relay output

3:1 way alarm logic level output, 1 way alarm relay output

⑥ Strengthened Function

0: No strengthening function 1: Modbus RS485 COM

⑦ Extension Input Output

00: No Expension 01:1 way current limit 02:3 way current limit

⑧ Funcion Code

（4）Install Hole Size

Unit：mm

Model	Pane Size H*B	Case Size h*b*L	Install Hole Size h1*b1
GR858-A	48*48	44.56*44.56*79.00	(44.56+1)*(44.56+1)
GR858-B	96*48	91.00*44.56*79.00	(91.00+1)* (44.56+1)
GR858-C	72*72	67.00*66.80*79.00	(67.00+1)*(66.80+1)
GR858-D	96*96	91.00*90.50*79.00	(91.00+1)*(90.50+1)

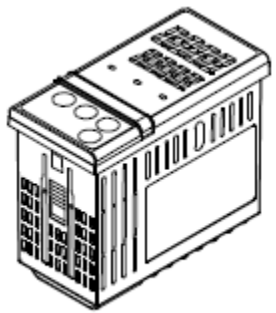

GR858-B

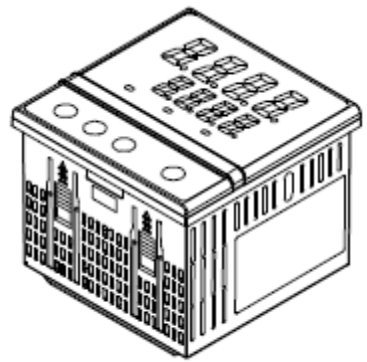

GR858-E

4. Electrical Wiring

（1） Relay/SSR/Current Voltage Output

Options		Terminal NO
Power Supply（85v-265v）		【5】【6】
Sensor Input	K/E/J/S/B/N/R/T/W3/W5	【18+】【17-】
	PT100/CU50	【16:A】【17:B】【18:B】
Main Output	Relay Output	【13】/【14】【15】
	SSR Output	【13+】【14-】
	Current Signal Output	【13+】【14-】
	Voltage Signal Output	【13+】【14-】
Alarm 1		【3】【4】
Alarm 2/ Output 2		【1】【2】/【1-】【2+】
COM		【11：A+】【12：B-】

(2) Three-Phase Full-Wave Control

Options		Terminals NO
Power Supply (85v-265v)		【11】【12】
Sensor Input	K/E/J/S/B/N/R/T/W3/W5	【36+】【35-】
	PT100/CU50	【34:A】【35:B】【36:B】
Main Output	Trigger 1	【25】【26】
	Trigger 2	【27】【28】
	Trigger 3	【29】【30】
Alarm 1		【9】【10】
Alarm 2/ Output 2		【7】【8】/【7-】【8+】
COM		【23: A+】【24: B-】

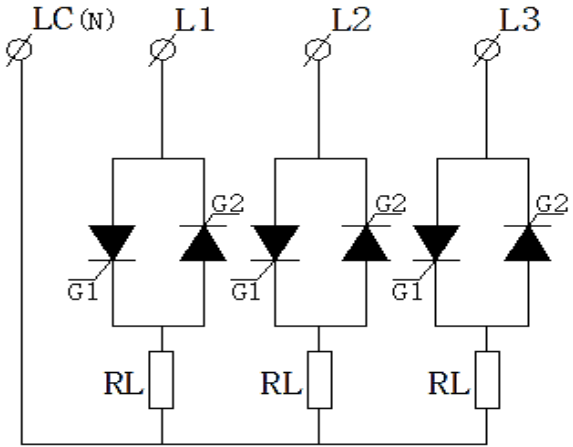

Control Single-Way SCR（Anti-Parallel）

Three-Phase Trigger（with midline）

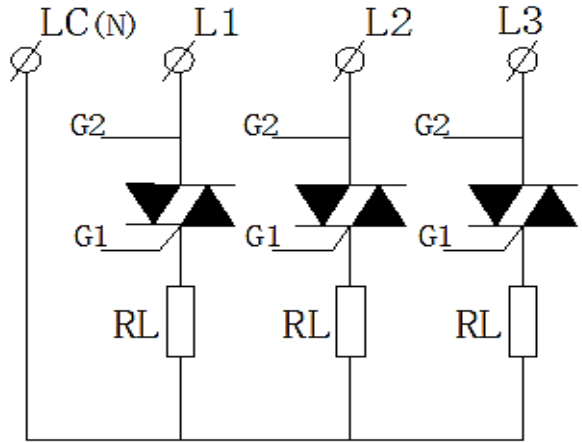

Control Two-Way SCR

Three-Phase Trigger（with midline）

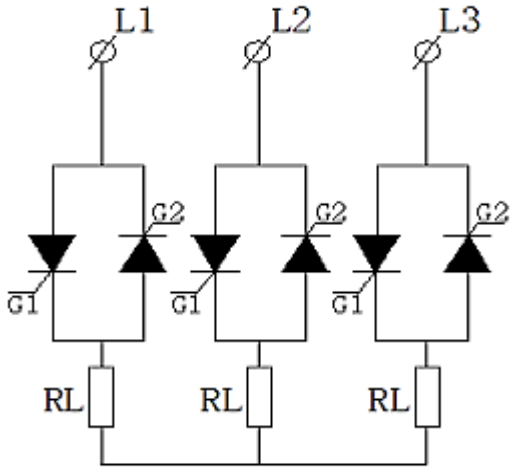

Control Single-Way SCR（Anti-Parallel）, Three-Phase Trigger（without midline）

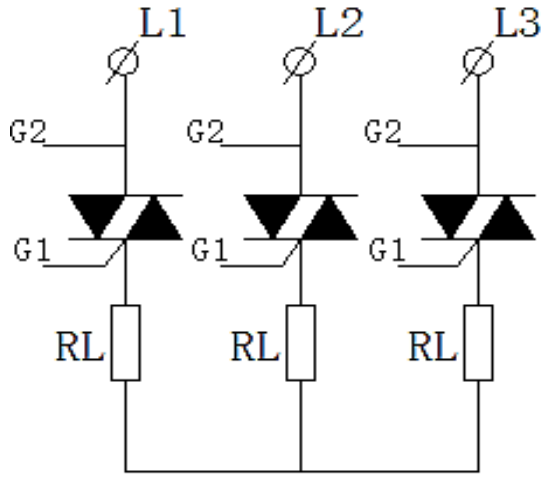

Control Two-Way SCR, Three-Phase Trigger （without midline）

（3）Single-Phase Phase-Shift

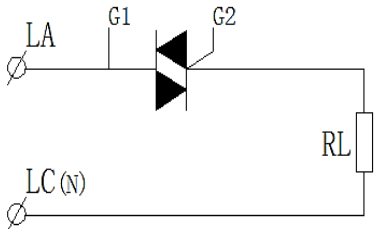

Control Two-Way SCR

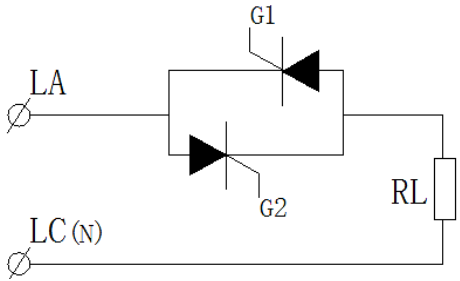

Control Single-Way SCR（Anti-Parallel）

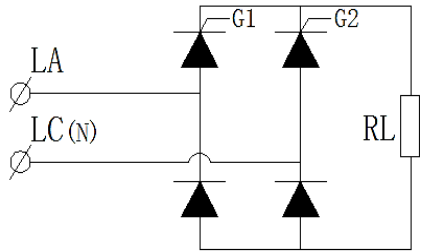

Control Single-Phase Semi-Controlled bridge rectifier

(4) Three-Phase Half-Wave Control

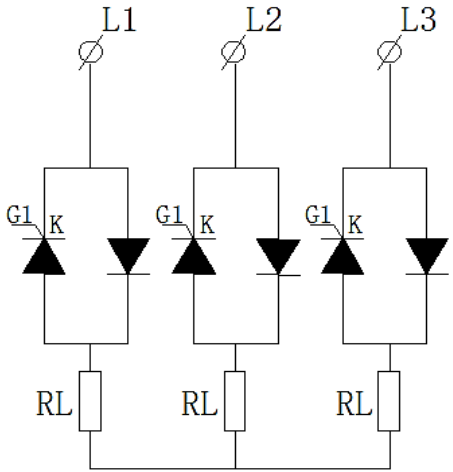

Three-Phase Half-Wave Control (without midline)

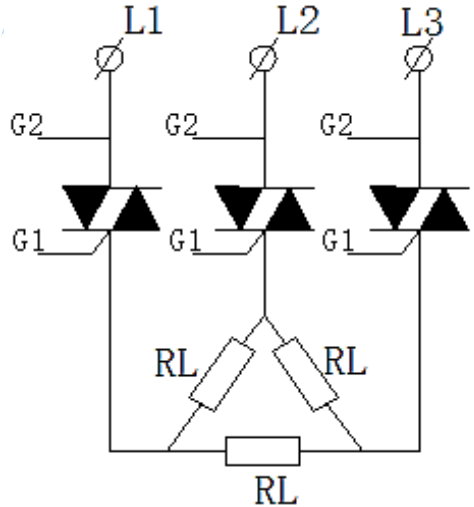

Three-Phase Control all support Triangle Wiring (if load=380V)

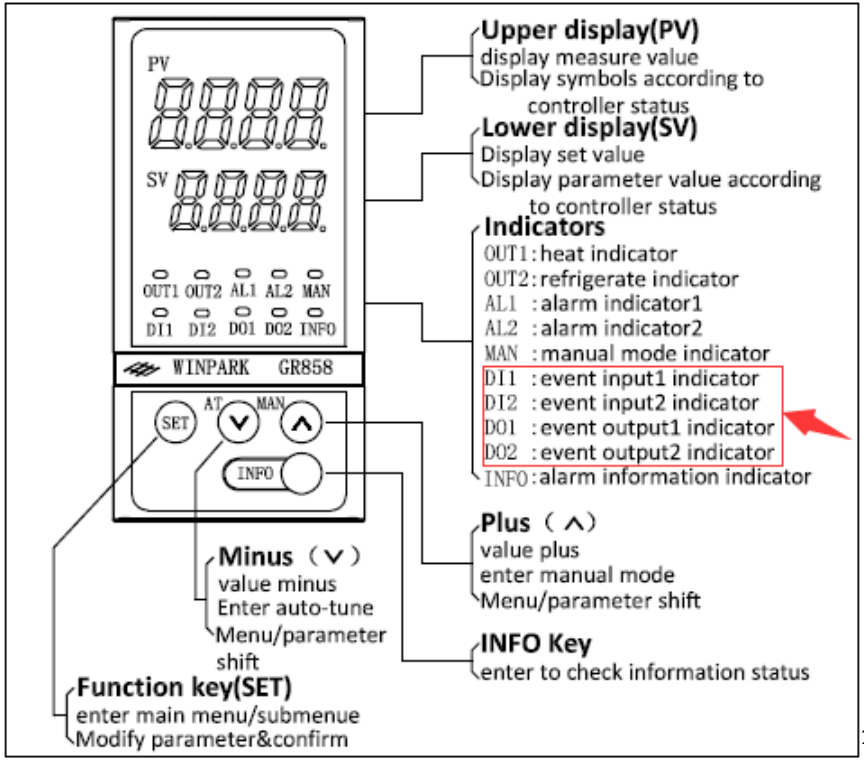

5. Operation Panel Explanation

1. Under Constant-Temperature-Mode（no curve control），all four lights are not bright.
2. When change into curve control mode（stop or suspend），all four lights are bright.
3. Under Curve operation, four lights flash in turn.

6. Communication Function

COM Format:8 data bits, 1 stop bits, even parity and addresses are all decimal addresses. The following is the usual communication address.

Parameter	Parameter Explanation		Address
PV	Display current temperature		W130
SV	Edit set temperature		W131
	Display set temperature		W132
	Heat Instructions		B224
	AT (Auto-Tuning)		B3296
Baud rate and station NO modification (inside SYS parameters)			
8-1	BAUD	MODBUS COM Baud Rate	W900
8-2	PCOL	MODBUS COM Station NO	W901

7. Menu Explanation

1. Press “SET” 3sec then into main menu
2. Press “∧∨” to next page (Please unlock first)
3. In Main Menu, press “SET” into Sub Menu
4. In Sub Menu, press “SET” lower display keep blinking means able to change parameter value. After change finished, press “SET” to save changes.
5. Press “INFO” once, return to main menu from sub menu, return to measurement page from main menu.
6. Most Parameters are mentioned in fellow

Main Menu	Sub Menu	Menu Define	Explanation	Address
LOCK Data Lock		Data Lock	0：Lock Parameter 1：Unlock Basic Parameter 8888：Unlock All Parameters 110：Restore Factory Settings	W905

F8 Program Control and Setting, available in 64-segment program control model	L1		Choose Operation Mode	0：Program Control Mode close，system under normal constant temperature control 1：After power on the stop state：Keep last breakpoint and able to restore scene 2：After power on the stop state：Multi-Stage reset and clear scene 3：After power on, start Multi-Stage program from beginning 4：After power on, if alarm3 not has deviation alarm, program continues. If alarm3 has deviation alarm, program into stop-state. 5：After power on，automatic judge temperature and start from breakpoint, operation condition is SST State Notice：Detail SST state in SST of L4	W144

F8 Program Control and Setting, available in 64-segment program control model	L2 Curve Setting	SP.00	00-stage temperature	Set starting temperature（Ambient Temperature）	W500
		T.00	00-stage time	Set timer from 00-stage to 01-stage （Unit: min）	W501
		PI.00	Choose PID Group, Default: Group 0	Several PID groups available	W502
		UA.00	Customize Parameter A	Assort with UER.A Example：UER.A=1，this parameter will be max output limit of stage，100%-0% output adjustable，Unit: percentage	W503
		UB.00	Customize Parameter B	When curve operation finished，user needs to set switch quantity signal in Alm2 output ： Set AOP.2=15; UB.**=1 or AOP.2=16;UB.**=3 in ALM menu.	W504

F8 Program Control and Setting, available in 64-segment program control model	L2 Curve Setting	SP.01	01-stage temperature	Set 01-stage temperature	W505
		T.01	01-stage time	Set timer from 01-stage to 02-stage If SP.02 and SP.01 have same value，that means holding time. When T**=0，stop heating in 01-stage When T**= -1, permanent in constant temperature	W506
		PI.01	Choose PID Group, Default: Group 0	Several PID groups available	W507
		UA.01	Customize Parameter A	Same as UA.00	W508

		UB.01	Customize Parameter B	Same as UB.00	W509
		……		Omit SP.02-UB.63	W510-W819
	L3 4 PID groups setting	P.0	Group-0, P value	PID value for Multistage Control	W850
		I.0	Group-0, I value		W851
		D.0	Group-0, D value		W852
		P.1	Group-1, P Value		W862
		I.1	Group-1, I Value		W863

		D.1	Group-1, D Value		W864
F8 Program Control and Setting, available in 64-segment program control model	L3 4 PID groups setting	P.2	Group-2, P Value	PID value for Multistage Control	W874
		I.2	Group-2, I Value		W875
		D.2	Group-2, D Value		W876
		P.3	Group-3, P Value		W886
		I.3	Group-3, I Value		W887
		D.3	Group-3, D Value		W888

F8 Program Control and Setting, available in 64-segment program control model	L4 Special Function Setting	SST	Temperature matching mode, start from breakpoint	0：start，time count from beginning 1：start，time count from current temperature point I) In constant temperature section，count from starting point of present segment II）In temperature rise section，if PV lower than temperature of current segment， start from start point of this segment. When PV is higher than temperature of next segment，start from starting point of next segment. If PV is between two segments, start from time point of matching temperature point. III）In temperature down section，when PV is higher than temperature of current segment, start from start point of current segment. If PV is	W146

				lower than temperature of next segment, start from start point of next segment. If PV is between two segments, start from time point of matching temperature point.	

<table>
<tr>
<td rowspan="2">F8 Program Control and Setting, available in 64-segment program control model</td>
<td rowspan="2">L4 Special Function Setting</td>
<td>CFG</td>
<td>Quantity of process recipe</td>
<td>Quantity of process recipe, different recipe quantity and different segments for each recipe.
<table>
<tr><td>配方总数 CFG</td><td>1</td><td>2</td><td>3</td><td>4</td><td>5</td><td>6</td><td>7</td><td>8</td><td>9</td><td>10</td></tr>
<tr><td>段数</td><td>64</td><td>32</td><td>21</td><td>16</td><td>12</td><td>10</td><td>9</td><td>8</td><td>7</td><td>6</td></tr>
<tr><td>配方（PF）：0</td><td>0</td><td>0</td><td>0</td><td>0</td><td>0</td><td>0</td><td>0</td><td>0</td><td>0</td><td>0</td></tr>
<tr><td>配方（PF）：1</td><td></td><td>32</td><td>21</td><td>16</td><td>12</td><td>10</td><td>9</td><td>8</td><td>7</td><td>6</td></tr>
<tr><td>配方（PF）：2</td><td></td><td></td><td>42</td><td>32</td><td>24</td><td>20</td><td>18</td><td>16</td><td>14</td><td>12</td></tr>
<tr><td>配方（PF）：3</td><td></td><td></td><td></td><td>48</td><td>36</td><td>30</td><td>27</td><td>24</td><td>21</td><td>18</td></tr>
<tr><td>配方（PF）：4</td><td></td><td></td><td></td><td></td><td>48</td><td>40</td><td>36</td><td>32</td><td>28</td><td>24</td></tr>
<tr><td>配方（PF）：5</td><td></td><td></td><td></td><td></td><td></td><td>50</td><td>45</td><td>40</td><td>35</td><td>30</td></tr>
<tr><td>配方（PF）：6</td><td></td><td></td><td></td><td></td><td></td><td></td><td>54</td><td>48</td><td>42</td><td>36</td></tr>
<tr><td>配方（PF）：7</td><td></td><td></td><td></td><td></td><td></td><td></td><td></td><td>56</td><td>49</td><td>42</td></tr>
<tr><td>配方（PF）：8</td><td></td><td></td><td></td><td></td><td></td><td></td><td></td><td></td><td>56</td><td>48</td></tr>
<tr><td>配方（PF）：9</td><td></td><td></td><td></td><td></td><td></td><td></td><td></td><td></td><td></td><td>54</td></tr>
</table>
</td>
<td>W143</td>
</tr>
<tr>
<td>PF</td>
<td>Current Recipe Number</td>
<td>Choose Pre-Set Curve</td>
<td>W142</td>
</tr>
</table>

F8 Program Control and Setting, available in 64-segment program control model	L4 Special Function Setting	TAG	Jump mode selection between segment and segment	When TAG=0：jump condition between segment and segment is time control. Time point will jump to next segment. Default: TAG-0 When TAG≠0：jump condition between segment and segment is temperature difference control，｜PV-SV｜＜TAG and start jump. Examples： TAG=3,SV=100， only measured PV Value between 97 to 103 is able to jump to next segment. Meet requirements of full-power heating in first segment. Or after one recipe of segment reach one temperature point, jump start.	W149

F8 Program Control and Setting, available in 64-segment program control model	L4 Special Function Setting	TAG	Jump mode selection between segment and segment	TAG usage: 1：Unit=1 degree, TAG=0 means no invalid function. 2：In rise selection: if PV value lower than SV value＞[TAG range], time stop until PV value=SV value. 3：In down selection: if PV value higher than SV value＞[TAG range], time stop until PV value. 4：In stable selection: if deviation value between PV value and SV value＞[TAG range], time stop until PV value reach deviation range. 5：TAG value can be used as global parameters and apply in all segments, also can configuration in customize parameter A or B and give each segment individual [TAG] attributes.	W149

F8 Program Control and Setting, available in 64-segment program control model	L4 Special Function Setting	UER.A	Customize Parameters	Under special conditions: Set UEr.A and UEr.B to allocate function: 0：no sense 1：Max Output Limit(output limit) 2：Min Output Limit(maintain min output) 3：Output variation limit(soft start) 4：Mode of Alarm3 5：Alarm3 upper limit 6：Alarm3 lower limit 7：Alarm3 parameter 8：TAG attributes Notice：Variation Ratio limit（soft start）restricts max variable value of per sec output. Unit: 0.001%. When value=10.0, max variable/per sec 10% output	W147

F8 Program Control and Setting, available in 64-segment program control model	L4 Special Function Setting	UER.B	Customize Parameters	Ditto	W148
		SPC		Curve tracking parameters, coordinate with PID control slope parameters	W217
	L5 AT in one segment	RUN	Operation Condition	Switch to 0：suspend state，used to do AT in current temperature point	W145
		T-ID	Segment	Do AT in one segment	W141
		P-ID	PID value storage	P-ID=1，PID value saved in Group1 after AT finished	W140
		T-SP	Temperature Value during AT	Only used as temperature value display. Forbid to change values otherwise curve will be changed.	W131

		AT	AT start/stop	Used for AT On: AT start Off: Terminate AT	W206
F.SJ			Count Down of current segment: min		W166
F.SJ			Count Down of current segment: sec		W165
F.ID			Current Segment		W141
F.RUN			Operation Condition	0. suspend during operation 1. start 2. start from beginning point of formula 3. Reset. All related parameters will be changed	W145

				into default value, enter into suspend state and wait for restart 4. Under operation (unable to be changed, if F.RUN=1 or 2, automatic turns to 4)	
F.PF			Current Operation Formula NO		W142

PID Basic Control Parameters	P		Proportional band	1. When P value increases, the slow rise to achieve the rectification time, but no overshoot. 2. When P value drops, overshoot and oscillation occurs, but temperature rapidly raised to the set value.	W211
	I		Integral time	1. When I value increases, long time to reach the set value, but fluctuation, overshoot and undershoot is less. 2. When I value drops, less time to reach the set value and temperature raised rapidly.	W212
	D		Derivative time	1. When D value increases, the overshoot and undershoot of rectification time is less, but naturally good fluctuation occurs. 2. When D value drops, long time to reach the set value, increase overshoot and undershoot.	W213

	IT		Overshoot suppression	Normally do not change parameter. Reduce IT value, reduce overshoot value	W214
	HT		Heating cycle	In controlling Three-Phase SSR output, do change value=198 to get function of phase-shift	W215
PID Basic Control Parameters	AT		AT switch	Press "∨" button for 6sec	W206
PID2 Main Control Parameters	INOS		Overshoot Suppression Coefficient	When increase this value, it can control first overshoot efficient.	W208
	LEV		Control Intensity Coefficient	In constant temperature condition，cold material in, temperature will drop, the bigger value of LEV and control output will increase.	W209
	OMAX		Max Output Limit	1. Voltage limit， unit: percentage， Default=100， means 100%.	W221

				Example：if change this parameter=50， 220V voltage will be limit into 110V 2.Press“INFO” button，F.099=percentage value of Voltage Limit.	
	OMIN		Min Output Limit	Min Output Limit	W222

PID2 Main Control Parameters	DMAX		Output Variation Limit	Notice: Variation Limit（soft start） is to limit per sec output, Unit: 0.001%. When Display=10.0 and means per sec 10% variable output	W223
TEMP Temperature Measurement	P-N1		Type of Control	PID control	W201
	P-N2		Type of Input	K、E、J、S、B、N、PT100、CU50 (Adjustable)	W133
	TR		Input Compensation	Temperature Correction	W136
	P-DP		Display Accuracy	0.No Decimal Point 1.Decimal Point	W138
	P-CF		℃/℉ shift	Shift ℃ and ℉	W137
	P-SH		Set Upper Limit	Upper Limit of range	W134
	P-SL		Set Lower Limit	Lower Limit of range	W135

ALM Alarm configuration	ALM1		Alarm1 mode	Support 24 alarm，followings are normal alarm code 0.no alarm 1.High Temperature Alarm （PV>SV+AH1） 2.Low Temperature Alarm（PV<SV-AL1） 9.Absolute Value Upper Limit（PV>AH1） 10.Absolute Value Lower Limit（PV<AL1）	W180
	AH1		Upper Limit of alarm1	Upper limit deviation value of Alarm1	W181
	AL1		Lower Limit of alarm1	Lower limit deviation value of Alarm1	W182
	AOP1		Alarm1 Option	Used to set output of segment	W183
	ALM2		Alarm2 mode	Same function as Alarm1 mode	W184
	AH2		Upper Limit of alarm2	Upper limit deviation value of Alarm2	W185

	AL2		Lower Limit of alarm2	Lower limit deviation value of Alarm2	W186
	AOP2		Alarm2 Option	Used to set output of segment	W187
	ALM3		Alamr3 mode	Special Function Backup	W188
	AH3		Upper Limit of alarm3	Special Function Backup	W189
	AL3		Lower Limit of alarm3	Special Function Backup	W190
ALM Alarm configuration	AOP3		Alarm3 Option	Special Function Backup	W191

SVC Program Control and Setting, available in 64-segment program control model	L1		Choose Operation Mode	Same Function and Operation with F8-L1	W142
	L2		Curve Setting	Same Function and Operation with F8-L2	W141
	L3		4-Group PID setting	Same Function and Operation with F8-L3	W131
	L4		Special Function	Same Function and Operation with F8-L4	W139
	L5		AT in one segment	Same Function and Operation with F8-L5	W512
MV Output Control	AOMD		Analog Output Mode	If model is analog output，following options 4-20mA 、0-20mA、0-5V、0-10V is adjustable	W126
	AOPZ		Analog Output Configuration	0.Heat Control 1.Transmitting Output	W127

MV Output Control	AOH		Transmitting High Point of Analog Output	Example：If changed into transmitting output, 0-200 degree corresponds to 4-20mA and change AOH=200, AOL=0	W128
	AOL		Transmitting Low Point of Analog Output		W129
	MAN		Manual Output Value	Press“∧”button for 6sec to set output value	W170
SYS System Configuration	BAUD		MODBUS COM Baud Rate	1.2=1200 2.4=2400 4.8=4800 9.6=9600 19.2=19200 38.4=38400 57.6=57600 115.2=115200	W900
	PCOL		MODBUS station NO	Communication Station NO	W901
DEF				Default to factory setting	

8、Example of curve control

Set heating temperature, cooling temperature or holding temperature inside curve setting. Temperature Unit: ℃, Time Unit: Min.

Here are one picture with 6-steps temperature control

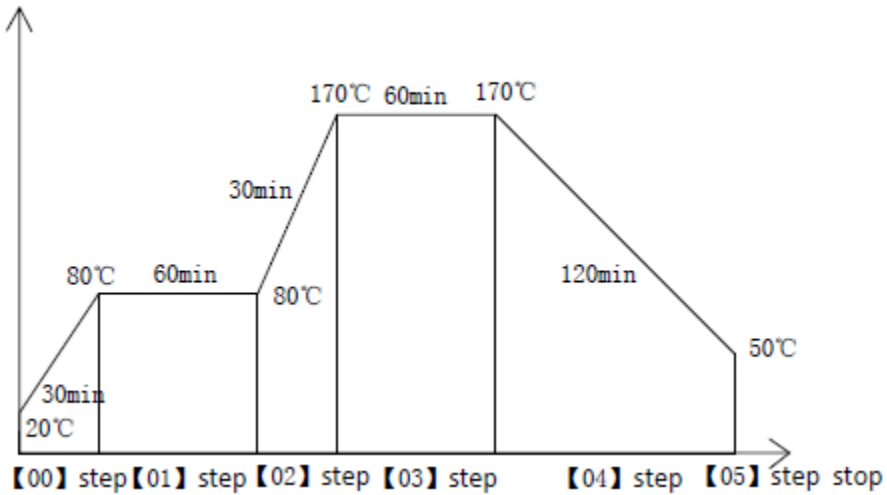

NO	Temperature valueSP.**	Run timeT.**	Description
00	20	30	30min heat up, temperature from 20℃ to 80℃
01	80	60	Heat preservation in 80℃ for 60min
02	80	30	30min heat up, temperature from 80℃ to 170℃
03	170	60	Heat preservation in 170℃ for 60min
04	170	120	120min cooling, temperature from 170℃ to 50℃
05	50	0	Stop

Menu：SUC menu for 8-segment curve setting function

Menu		Set Value	COM Address
L1	Operation Mode Chosen	2	144
L2	Curve Setting		
	SP.00	20	500
	T.00	30	501
	SP.01	80	505
	T.01	60	506
	SP.02	80	510
	T.02	30	511
	SP.03	170	515
	T.03	60	516
	SP.04	170	170
	T.04	120	120
	SP.05	50	50

	T.05	0	T=0, stop heating; when T =-1, heat preservation permanently

9、Operation Mode of Curve Control：

1.Press “info” for 2sec，start curve operation，“DI1” “DI2”“DO1”“DO2” flash in turn (means under operation).

2.During operation，press “info” for 2sec，reset：Temperature and Time return to starting point，enter into stop state and wait for restart.

3.F.RUN=0, suspend operation，“DI1” “DI2”“DO1”“DO2” 4 lights always in light state. F.RUN=1, continue to operate.

4.F.RUN=1, keep operation，“DI1” “DI2”“DO1”“DO2” 4 lights flash in turn (means under operation).

Press INFO for 2Sec：start or stop Multistage Control.

Press INFO into Context Menu，press “^” to switch.

F.SJ: Run Time：

Min and Sec（Run Time is count down）

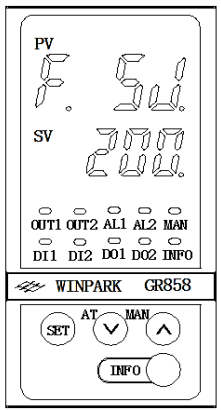

F.ID: Present Operation Segment

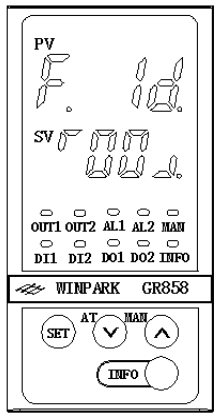

F.RUN： Operation Status

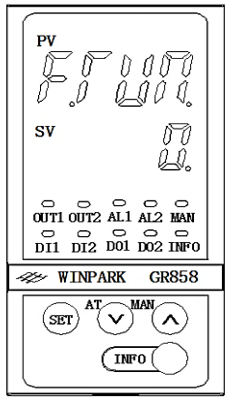

F.RUN=0 Suspend in the operation progress

F.RUN=1 Start

F.RUN=2 Start at initial point

F.RUN=3 Reset. Initialization and all related parameters return to zero. Enter a state of suspended, wait to restart

F.PF: Formula Number

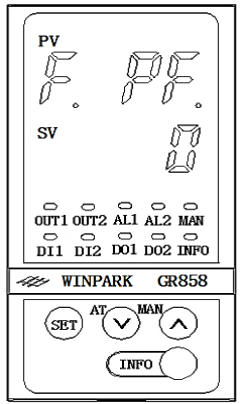

10、Error code sheet

Fault code table		
Error display	Code explanation	Troubleshooting
Err0	exceed AD input upper limit	check if thermocouple is disconnected
Err1	exceed AD input lower limit	check if analog input is connected reservedly
Err2	RTD break	check if RTD is disconnected
Err3	exceed measure range upper limit	check if the used sensor type is in accordance with setting
Err4	exceed measure range lower limit	check if the used sensor type is in accordance with setting
Err5	exceed set value upper limit	check if the SV upper limit is too small
Err6	exceed set value lower limit	check if the SV upper limit is too big
Err7	room temperature error	controller malfunction, please contact supplier for service
Err8	thermocouple connect reversed	check if thermocouple is connected reservedly
F. 001	control cycle set value conflict	set reasonable control cycle
F. 002	output breaks	check if heating circuit-breaks
F. 003	output adheres	check if heat circuit has abnormal NC parts
F. 004	relay output reaches set times	change controller
F. 005	working temperature exceed	check if temperature in cabinet is too high